Ref. RP805S_Euro III_EN_V2026.01

RP805S

PAVER

RP805S Paver is one of the important models of 5 series middle paver.According to the domestic and international market demand,8m middle retractable Paver is developed on the basis of current middle Paver.This Paver is mainly used for surface asphalt paving construction,giving consideration to stable soil material paving.Equipped with a new generation of intelligent control system,this machine adopts the most advanced technologies in the world today,such as full hydraulic drive,microcomputer control ,left and right Independent Drive ,ultrasonic material level sensing control,electronic automatic leveling,vibrating compaction,etc,this machine has the advantages of good paving stability,uniform feeding and distributing material ,high precompaction density, good flatness,comfortable operation,convenient maintenance ,energy sving and environmentalprotection,etc…

RP805S

PAVER

Performance and characteristics

Shape and dimension

Unit: mm

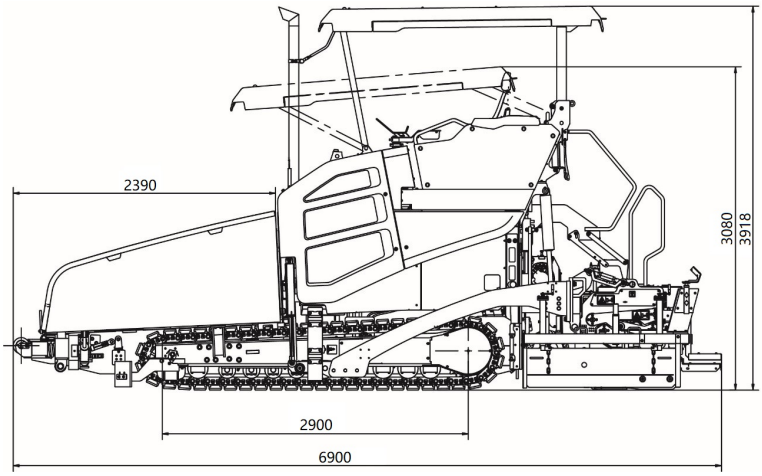

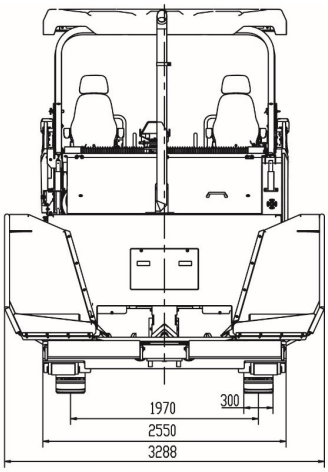

Main specifications

Item	Unit	Performance parameter (For E2550ATV)
Basic paving width	m	2.5~5.0
Basic paving width	m	8
Maximum paving thickness	mm	300
Working speed	m/min	0~25
Traveling speed	km/h	0~4.0
Theoretic productivity	t/h	800
Hopper capacity	t	14
Gradeability		20
Evenness	mm/3m	≤3
Lateral gradient error	%	±0.02
Camber adjustment range	%	-1.5~+4.5
Power of diesel engine	kW	142
Diesel engine speed	r/min	2000
Material distribution speed	r/min	0~95
Material conveyance speed	m/min	0~30
Tamper speed	r/min	0~1800
Tamper amplitude	mm	4
Vibration frequency	Hz	0~50
Shape and dimension	mm	6900×2550×3918
Overall weight	t	20.5~21.8
Capacity of fuel tank	L	280
Hydraulic oil tank capacity	L	260

Notes:
Specifications and configurations may vary depending on options and regional regulations. XCMG reserves the right to make changes to specifications without prior notice.

XCMG ROAD MACHINERY BUSINESS
Email: road.marketing@xcmg.com

Offical Website Facebook Youtube