Ref. XKC183_DS_EN_V2026.01

XKC183

XKC183

Powder Binder Spreader

XKC183 powder binder spreader is mainly suitable for distributing powder materials such as cement, lime and fly ash, and used for cement spraying for highway cold regeneration construction, stabilized soil and a variety of adhesives spraying for roadbed, and can also be used for powder material spraying for other working conditions.

Powder binder spreader truck is key equipment for highway cold-in-place regeneration construction it is special equipment for stabilized soil construction, widely used in highway and municipal construction.

With characteristics of high efficiency, environmental protection, simple operation, good construction quality and high reliability.

XKC183

Powder Binder Spreader

Performance and characteristics

- SINOTRUK total mass of 25 tons chassis, strong power, high transfer speed.
- The tank is equipped with a relief beam, and low-resistance feeding screw.
- Variable pitch screw feeding, strong conveying capacity and high reliability.
- The metering roller has closed-loop control, accurate measurement and uniform distribution.
- The feeding screw, metering roller and powder box connecting parts adopt unique bearing external sealing structure, reliable sealing and simple maintenance.
- Equipped with pulse bag dust removal system, good environmental protection.
- The hydraulic system is designed to combine the variable power sensitive hydraulic pump and load sensitive hydraulic system, providing power output for screw shaft, the system produces less heat, energy conservation and high efficiency.

Dimension in working configuration

Unit: mm

Model	L	W	H	A	B1	B2	C
XKC183	9550	2550	3450	1500	4600	1350	2100

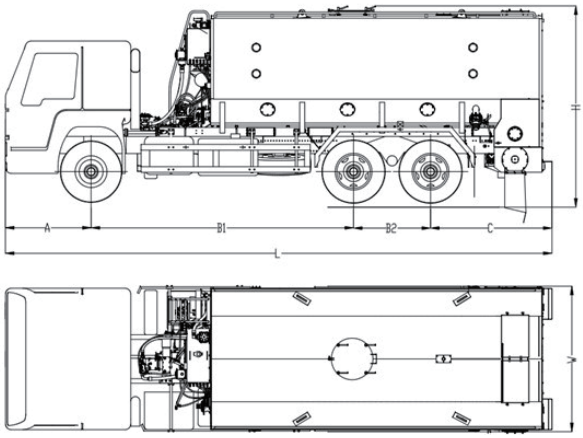

Main specifications

Name		Unit	Parameter
Items	Model	-	XKC183
Performance Parameters	Filler silo capacity	m³	18
	Spreading width	mm	400～2400
	Spreading density	L/m²	5～30
	Spreading precision	%	±5
	Minimum working speed	km/h	2.5
Chassis performance parameter	Model	-	SINOTRUCK(China Ⅱ)
	Engine model	-	WP10.340E22
	Engine power	kW/（r/min）	250/2200
Dimensions	Overall dimensions (L*W*H)	mm	9550×2550×3450(Subject to the actual vehicle)
Weights	Fuel tank	L	400
	Curb weight	kg	17250
	Total weight	kg	25000

Notes:
Specifications and configurations may vary depending on options and regional regulations. XCMG reserves the right to make changes to specifications without prior notice.

XCMG ROAD MACHINERY BUSINESS
Email: road.marketing@xcmg.com

Offical Website Facebook Youtube